- **Port size: DN 8 ... 25, G1/4 ... 1 (DIN ISO 228/1)**
- **Qualification approval EN 161 and EN ISO 23553-1**
- **Short response time < 1 s**
- **Valve operates without differential pressure**
- **EU-Type Examination: Certificate product ID-No.: CE-0085CN0205 valve class A: G1/4 ... 3/4; B: G1; valve group 2**

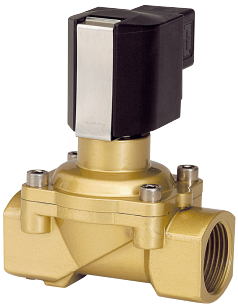

Technical features

Medium:
Neutral gases and liquid fuels
Switching function:
Normally closed
Operation:
Solenoid actuated, with forced lifting
Mounting position:
Optional, preferably solenoid vertical on top

Flow direction:
Determined
Port size:
G1/4, G3/8, G1/2, G3/4, G1
Operating pressure:
0 … 8 bar (0 ... 116 psi)

Fluid temperature:
0° ... +60°C (+32° ... +140°F)
Ambient temperature:
0° ... +60°C (+32° ... +140°F)

Material:
Body: Brass (CW617N)
Seat seal: NBR-G
Internal parts: Stainless steel, Brass

Strainer (with maximum mesh size of 0.25 mm) is necessary upstream of the valve.

Technical data - standard models

Symbol	Port size	Orifice (mm)	Flow kv value *1) (m^3/h)	Operating pressure *2) (bar)	Weight (kg)	Model solenoid 12 ... 120 V	Model solenoid 121 ... 230 V
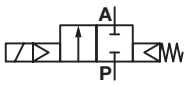	G1/4	8	1,1	0 ... 8	0,8	8209000.9178.xxxxx	8209000.9179.xxxxx
	G3/8	10	2,3	0 ... 8	0,8	8209100.9178.xxxxx	8209100.9179.xxxxx
	G1/2	12	2,6	0 ... 8	0,9	8209200.9178.xxxxx	8209200.9179.xxxxx
	G3/4	20	5,4	0 ... 8	1	8209300.9178.xxxxx	8209300.9179.xxxxx
	G1	25	5,8	0 ... 8	1,3	8209400.9178.xxxxx	8209400.9179.xxxxx

xxxxx Please insert voltage and frequency codes
*1) Cv-value (US) ≈ kv value x 1,2
*2) For gases and liquid fluids up to 25 mm^2/s (cSt)

Our policy is one of continued research and development. We therefore reserve the right to amend, without notice, the specifications given in this document. (2014 - 5730k) © 2015 Buschjost GmbH

Option selector

8209★00.★★★★.★★★★★

Thread form	Substitute
1/4"	0
3/8"	1
1/2"	2
3/4"	3
1"	4

Frequency	Substitute
See table frequency codes	xx

Voltage	Substitute
See Voltage codes	xxx

Solenoid options	Substitute
12 ... 120 V	9178
121 ... 230 V	9179

Solenoid 917x

Frequency

Solenoid 9178: 12 ... 120 V

Solenoid 9179: 121 ... 230 V

Standard solenoid sytems

Voltage and Frequency Solenoid 9178 *1)					
Code Voltage	Code Frequency	Voltage	Frequency	Power consumption Inrush	Power consumption Holding
012	00	12 V d.c.	-	18 W	18 W
024	00	24 V d.c.	-	18 W	18 W
024	49	24 V a.c. *2)	40 ... 60 Hz	20 VA	20 VA
110	49	110 V a.c. *2)	40 ... 60 Hz	20 VA	20 VA
Voltage and Frequency Solenoid 9179 *1)					
230	49	230 V a.c. *2)	40 ... 60 Hz	20 VA	20 VA

*1) c US coil only
*2) A.c. only with rectifier plug

Further versions on request!

Electrical details for all solenoid systems

Design	DIN VDE 0580
Voltage range	±10%
Duty cycle	100% ED
Protection class	EN 60529 IP65
Socket	Form A acc. to DIN EN 175301-803 (included)

According to DIN VDE 0580 at a solenoid temperature of +20°C.
At operating state temperature the input power of a coil decreases by up to ca. 30% due to physical reasons.

Additional solenoid systems (available since April 2018)

ATEX category	ATEX protection class	IP protection class	Solenoid	Standard voltages	Old variant
II 2G II 2D	Ex eb mb IIC T3 Gb Ex mb tb IIIB T140°C Db	IP66	6120	12 V d.c., 24 V d.c., 110 V a.c., 230 V a.c.	9191

Attention!
The conditions imposed on the Ex approvals lead to reduction of the permissible standard temperature ranges in the cases of explosion protected solenoids.

Section View

G1/4 ... 1

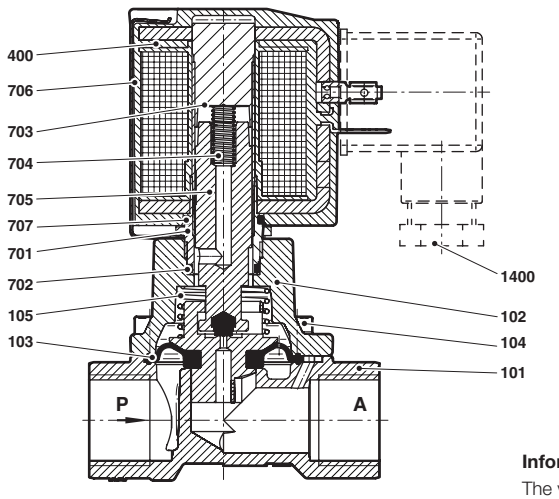

Nr.	Description
101	Valve body
102	Valve cover
103	Diaphragm
104	Allen head screw
105	Pressure spring
400	Solenoid
701	Core tube
702	O-ring
703	Round plate
704	Pressure spring
705	Plunger
706	Spring clip
707	O-ring
1400	Socket (included)

Information concerning expendable parts:
The valves have been prototype tested.
Expendable parts can only be replaced by the manufacturer.

Our policy is one of continued research and development. We therefore reserve the right to amend, without notice, the specifications given in this document. (2014 - 5730k) © 2015 Buschjost GmbH

Dimensions

G1/4 ... 1

Abmessungen in mm
Projection/First angle

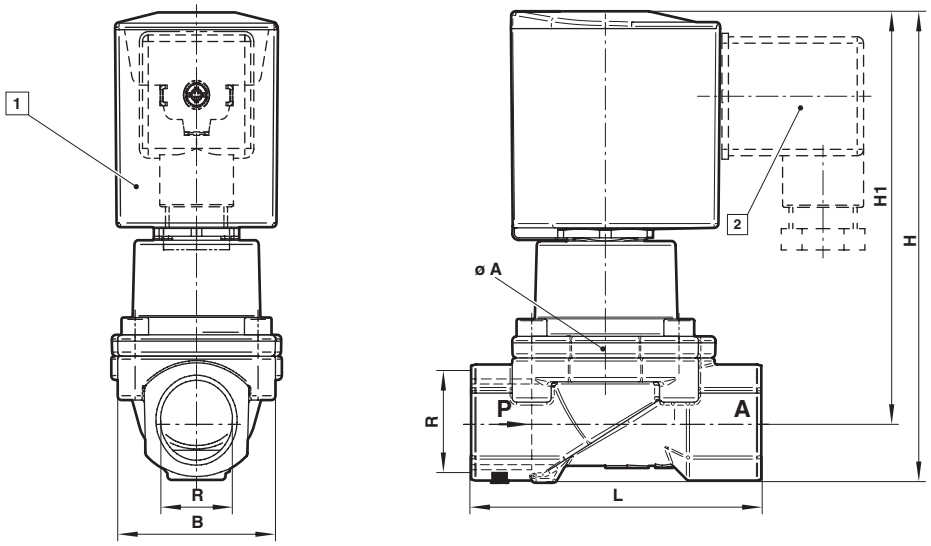

1 Solenoid rotatable 360°
2 Socket turnable 4 x 90°
(Socket included)

Port size R	A	H	H1	L	Model
G1/4	44	104	92,5	60	8209000.917x.xxxxx
G3/8	44	104	92,5	60	8209100.917x.xxxxx
G1/2	44	108	94,5	67	8209200.917x.xxxxx
G3/4	50	115	99	80	8209300.917x.xxxxx
G1	62	124	103,5	95	8209400.917x.xxxxx

Note to Pressure Equipment Directive (PED):

The valves of this series, including the connection size DN 25 (G 1), are according to clause 4 § 3 of the Pressure Equipment Directive (PED) 2014/68/EU. This means interpretation and production are in accordance to engineers practice wellknown in the member countries.

The available CE labelling relates to the (Gas appliances) Regulation (EU) 2016/426. A copy of the EC prototype test certificate is provided with the product.

Note to Electromagnetic Compatibility Guideline (EEC):

The valves shall be provided with an electrical circuit which ensures the limits of the harmonised standards EN 61000-6-3 and EN 61000-6-1 are observed, and hence the requirements of the Electromagnetic Compatibility Guideline (2014/30/EU) satisfield.

Our policy is one of continued research and development. We therefore reserve the right to amend, without notice, the specifications given in this document. (2014 - 5730k) © 2015 Buschjost GmbH